Technological University of the Philippines Visayas
COLLEGE OF ENGINEERING
Talisay City, Negros Occidental

Up and Down Counters Behavioral Modeling with CPLD

A Project presented to the

Computer Engineering Department

of Technological University of the Philippines Visayas

In Partial Fulfillment

of the Requirements for the Subject

HDL

Tappa, Nestor Luis Jr. M.

Up Counter with TFF

Design

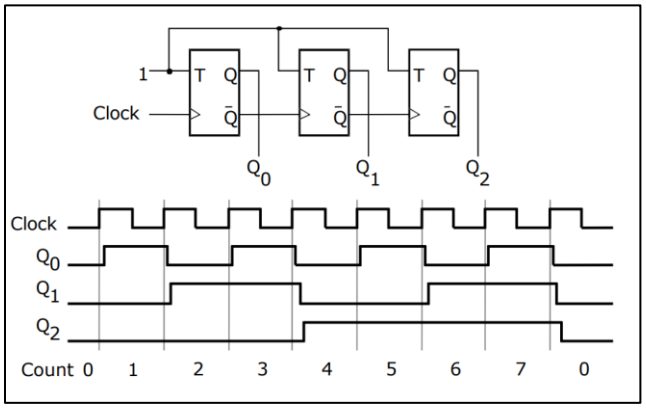

Verilog Code

```
module up_counter (clk, T, Q);
        input clk, T;
        output [2:0] Q;

        tff_posedge tff0 (clk, T, Q[0]);
        tff_posedge tff1 (~Q[0], T, Q[1]);
        tff_posedge tff2 (~Q[1], T, Q[2]);

endmodule

module tff_posedge (clk, t, q);
    input clk, t;
    output reg q;

    initial q = 0;

    always @ (posedge clk) begin
        if(t == 1) begin
            q <= ~q;
        end
    end
endmodule

module tb_up_counter;
        reg clk, T;
        wire [2:0] Q;

        up_counter tb(clk,T,Q);

        initial begin
                clk = 0; T = 0;
                $display("Time\tClk\tT\tQ");
                $monitor("%0t\t%b\t%b\t%b",$time,clk,T,Q);
        end
        initial begin
                forever #1 clk=~clk;
        end
        initial begin
                #1 T = 1;
                #14 $finish;
        end
endmodule
```

Transcript

```
VSIM 5> run
# GetModuleFileName: The specified module could not be found.
#
#
# Time  Clk     T       Q
# 0     0       0       000
# 1     1       0       000
# 2     0       1       000
# 3     1       1       001
# 4     0       1       001
# 5     1       1       010
# 6     0       1       010
# 7     1       1       011
# 8     0       1       011
# 9     1       1       100
# 10    0       1       100
# 11    1       1       101
# 12    0       1       101
# 13    1       1       110
# 14    0       1       110
# 15    1       1       111
# 16    0       1       111
# 17    1       1       000
# ** Note: $finish    : C:/intelFPGA_lite/20.1/Up and Down Counters/Up Counter.v(40)
#    Time: 18 ps  Iteration: 0  Instance: /tb_up_counter
```

Timing Diagram

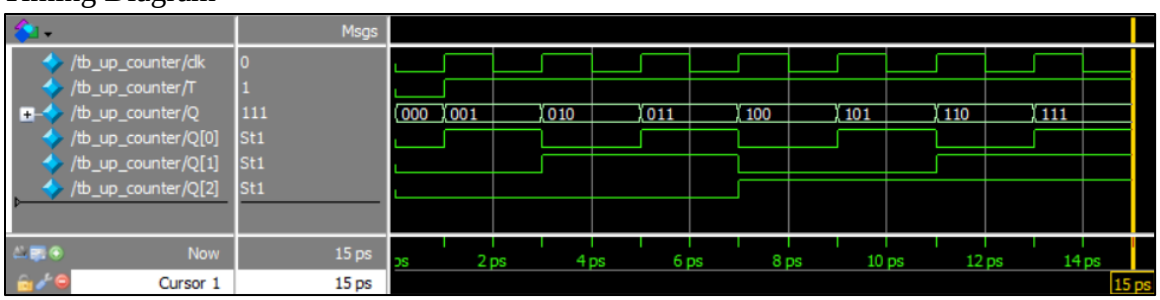

Down Counter with TFF

Design

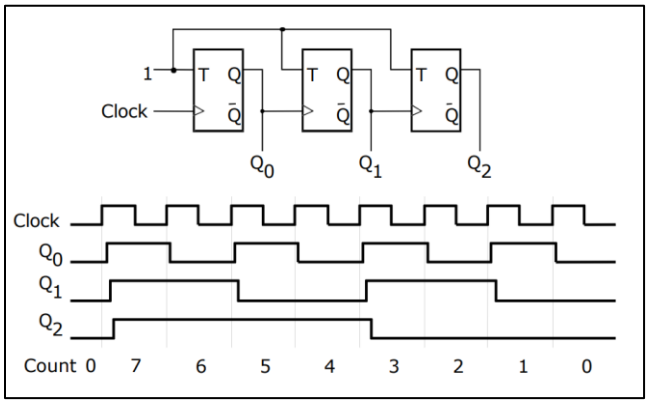

Verilog Code

```
module down_counter (clk, T, Q);
        input clk, T;
        output [2:0] Q;

        tff_posedge tff0 (clk, T, Q[0]);
        tff_posedge tff1 (Q[0], T, Q[1]);
        tff_posedge tff2 (Q[1], T, Q[2]);

endmodule

module tff_posedge (clk, t, q);
    input clk, t;
    output reg q;

    initial q = 0;

    always @ (posedge clk) begin
        if(t == 1) begin
            q <= ~q;
        end
    end
endmodule


module tb_down_counter;
        reg clk, T;
        wire [2:0] Q;

        down_counter tb(clk,T,Q);

        initial begin
                clk = 0; T = 0;
                $display("Time\tClk\tT\tQ");
                $monitor("%0t\t%b\t%b\t%b",$time,clk,T,Q);
        end
        initial begin
                forever #1 clk=~clk;
        end
        initial begin
                #1 T = 1;
                #16 $finish;
        end
endmodule
```

Transcript

```
VSIM 4> run
# Time   Clk      T        Q
# 0      0        0        000
# 1      1        1        111
# 2      0        1        111
# 3      1        1        110
# 4      0        1        110
# 5      1        1        101
# 6      0        1        101
# 7      1        1        100
# 8      0        1        100
# 9      1        1        011
# 10     0        1        011
# 11     1        1        010
# 12     0        1        010
# 13     1        1        001
# 14     0        1        001
# 15     1        1        000
# 16     0        1        000
# ** Note: $finish    : C:/intelFPGA_lite/20.1/Up and Down Counters/Down Counter.v(41)
#    Time: 17 ps  Iteration: 0  Instance: /tb_down_counter
```

Timing Diagram

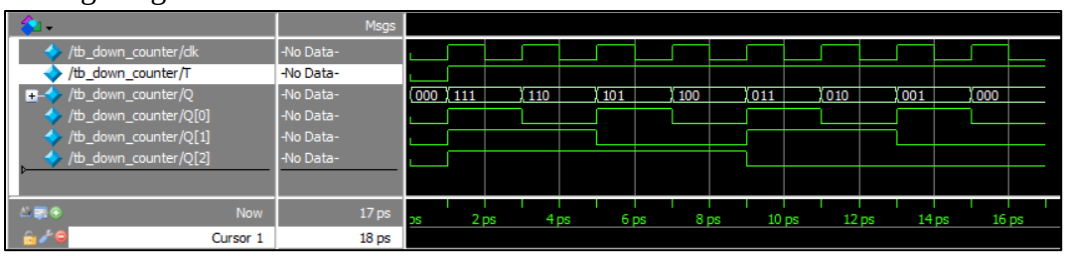

Technological University of the Philippines Visayas
COLLEGE OF ENGINEERING
Talisay City, Negros Occidental

Up and Down Counter with TFF

Verilog Code

```
module Counter_Final(clk_in,T,ctrl,seg);
    input clk_in,T, ctrl;
    output [6:0] seg;
    wire clk_slow;

    clock_divider #(10000000) slow_clk (clk_in,clk_slow);

    counter coun(clk_slow,T,ctrl,seg);
endmodule

module counter (clk,T,ctrl,seg);
    input clk, T, ctrl;
    output [6:0] seg;

   wire [2:0] Q, Q_up, Q_down;
   reg [2:0] Q_reg;

    up_counter up (clk, T, Q_up);
    down_counter down (clk, T, Q_down);

    always @(posedge clk) begin
        if (T) begin
            Q_reg = (ctrl) ? Q_up : Q_down;
        end
    end

    assign Q = Q_reg;

    assign seg = (Q == 3'b000) ? 7'b1111110 :  // 0
                 (Q == 3'b001) ? 7'b0110000 :  // 1
                 (Q == 3'b010) ? 7'b1101101 :  // 2
                 (Q == 3'b011) ? 7'b1111001 :  // 3
                 (Q == 3'b100) ? 7'b0110011 :  // 4
                 (Q == 3'b101) ? 7'b1011011 :  // 5
                 (Q == 3'b110) ? 7'b1011111 :  // 6
                 (Q == 3'b111) ? 7'b1110000 :  // 7
                 7'b1111111;
endmodule
```

```

module up_counter (clk, T, Q);
   input clk, T;
      output [2:0] Q;

      tff_posedge tff0 (clk, T, Q[0]);
      tff_posedge tff1 (~Q[0], T, Q[1]);
      tff_posedge tff2 (~Q[1], T, Q[2]);

endmodule

module down_counter(clk,T,Q);
   input clk, T;
   output [2:0] Q;

   tff_posedge tff0 (clk, T, Q[0]);
   tff_posedge tff1 (Q[0], T, Q[1]);
   tff_posedge tff2 (Q[1], T, Q[2]);
endmodule

module tff_posedge (clk, t, q);
    input clk, t;
    output reg q;

    initial q = 0;


    always @ (posedge clk) begin
        if(t) begin
            q <= ~q;
        end
        else begin
            q <= q;
         end
    end
endmodule
```

```

module clock_divider(clk_in,clk_out);

    input clk_in;
    output reg clk_out;

    parameter DIVIDE_BY = 1000000;
    reg [31:0] counter;

    initial begin
        counter = 0;
        clk_out = 0;
    end

   always @(posedge clk_in) begin
       if (counter == (DIVIDE_BY - 1)) begin
           counter <= 0;
           clk_out <= ~clk_out;  // Toggle the output clock
       end else begin
           counter <= counter + 1;
       end
   end

endmodule
```

Pin Planner

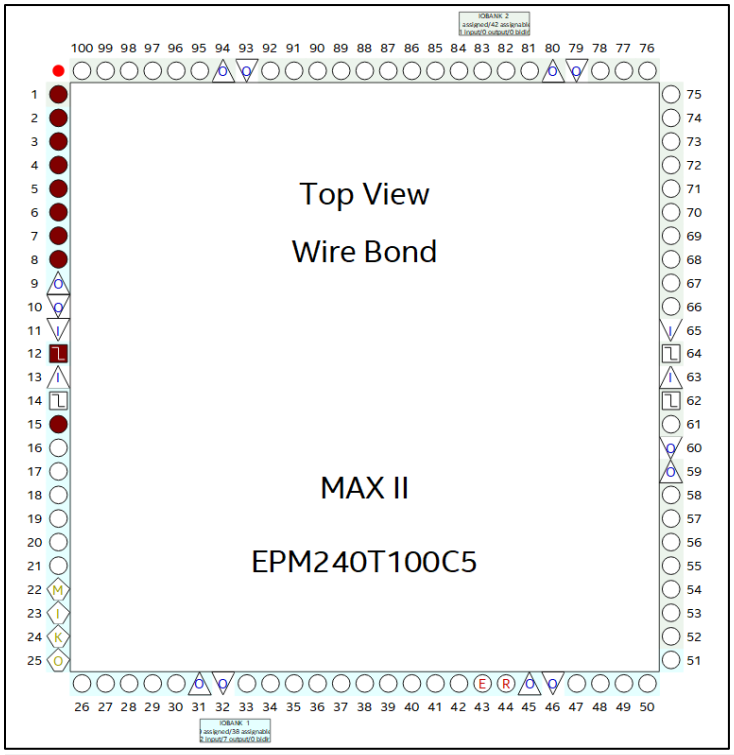

Node Name	Direction	Location	I/O Bank	·itter Locatior	I/O Standard	Reserved	ırrent Streng	ict Preservati
in T	Input	PIN_1	2	PIN_1	3.3-V LVTTL		16mA ...ault)	
in clk_in	Input	PIN_12	1	PIN_12	3.3-V LVTTL		16mA ...ault)	
in ctrl	Input	PIN_2	1	PIN_2	3.3-V LVTTL		16mA ...ault)	
out seg[6]	Output	PIN_3	1	PIN_3	3.3-V LVTTL		16mA ...ault)	
out seg[5]	Output	PIN_5	1	PIN_5	3.3-V LVTTL		16mA ...ault)	
out seg[4]	Output	PIN_7	1	PIN_7	3.3-V LVTTL		16mA ...ault)	
out seg[3]	Output	PIN_15	1	PIN_15	3.3-V LVTTL		16mA ...ault)	
out seg[2]	Output	PIN_4	1	PIN_4	3.3-V LVTTL		16mA ...ault)	
out seg[1]	Output	PIN_6	1	PIN_6	3.3-V LVTTL		16mA ...ault)	
out seg[0]	Output	PIN_8	1	PIN_8	3.3-V LVTTL		16mA ...ault)	
<<new node>>								